Experiment – 2A

Student Name: ABHISHEK KUMAR MISHRA
UID: 24MCA20464
Branch: MCA
Section/Group: 24MCA - 6B
Semester: 4
Date of Performance: 21 - 01 - 2026
Subject Name: Internet of Things Lab
Subject Code: 24CAP-751

AIM:
Interface of 16*2 Liquid crystal (LCD) with Arduino Uno.

OBJECTIVE:

1. To study the construction and working of a **16×2 Liquid Crystal Display (LCD)**.
2. To interface a **16×2 LCD with Arduino Uno** using the LiquidCrystal library.
3. To understand the role of **RS, RW, EN, and data pins (D4–D7)** of the LCD.
4. To operate the LCD in **4-bit mode** for efficient utilization of Arduino pins.
5. To display **static text messages** on different rows and columns of the LCD.
6. To learn how to use **lcd.begin(), lcd.setCursor(), and lcd.print()** functions.
7. To understand **contrast and backlight control** of the LCD module.
8. To verify proper interfacing by observing **correct text output on the display**.
9. To gain hands-on experience in **hardware interfacing using Arduino**.
10. To develop basic skills in **embedded system programming** using Arduino.

INPUT / APPARATUS USED:

1. Arduino Uno – Used as the main microcontroller to control the LCD.
2. 16×2 Liquid Crystal Display (LCD) – Used to display alphanumeric characters.
3. Breadboard – Used for making temporary circuit connections.
4. Resistor (1 kΩ) – Used to limit current and protect the LCD (especially backlight/contrast).
5. Jumper Wires – Used for connecting Arduino pins to the LCD module.
6. USB Cable – Used to connect Arduino Uno to the computer for programming and power supply.
7. Computer with Arduino IDE – Used to write, compile, and upload the program to Arduino.

Component List

Name	Quantity	Component
U1	1	Arduino Uno R3
U2	1	LCD 16 x 2
Rpot1	1	250 kΩ Potentiometer
R1	1	1 kΩ Resistor

PROCEDURE:

The procedure involves interfacing a 16×2 Liquid Crystal Display (LCD) with an Arduino Uno in 4-bit mode. The LCD is connected to the Arduino using control pins and data pins, and the LiquidCrystal library is used to initialize and control the display. Proper wiring and programming allow alphanumeric characters to be displayed on the LCD. The following steps describe the complete procedure for interfacing the LCD with Arduino Uno.

1. Open the Arduino IDE on the computer.
2. Place the Arduino Uno and breadboard on the working area.
3. Insert the 16×2 LCD module on the breadboard carefully.
4. Connect VSS (GND) of the LCD to GND of the Arduino.
5. Connect VCC of the LCD to 5V of the Arduino.
6. Connect the VEE (contrast) pin of the LCD to GND through a 1 kΩ resistor to adjust contrast.
7. Connect the RS pin of the LCD to digital pin 12 of the Arduino.
8. Connect the RW pin of the LCD permanently to GND.
9. Connect the EN (Enable) pin of the LCD to digital pin 11 of the Arduino.
10. Connect data pins D4, D5, D6, and D7 of the LCD to Arduino digital pins 5, 4, 3, and 2 respectively.
11. Connect the backlight anode (+) to 5V through a resistor and the cathode (−) to GND.
12. Write the Arduino program using the LiquidCrystal library.
13. Compile and upload the program to the Arduino Uno using a USB cable.
14. Observe the text displayed on the 16×2 LCD.
15. Verify that the text appears correctly on both rows of the display.

CIRCUIT OF LCD WITH ARDUINO UNO:

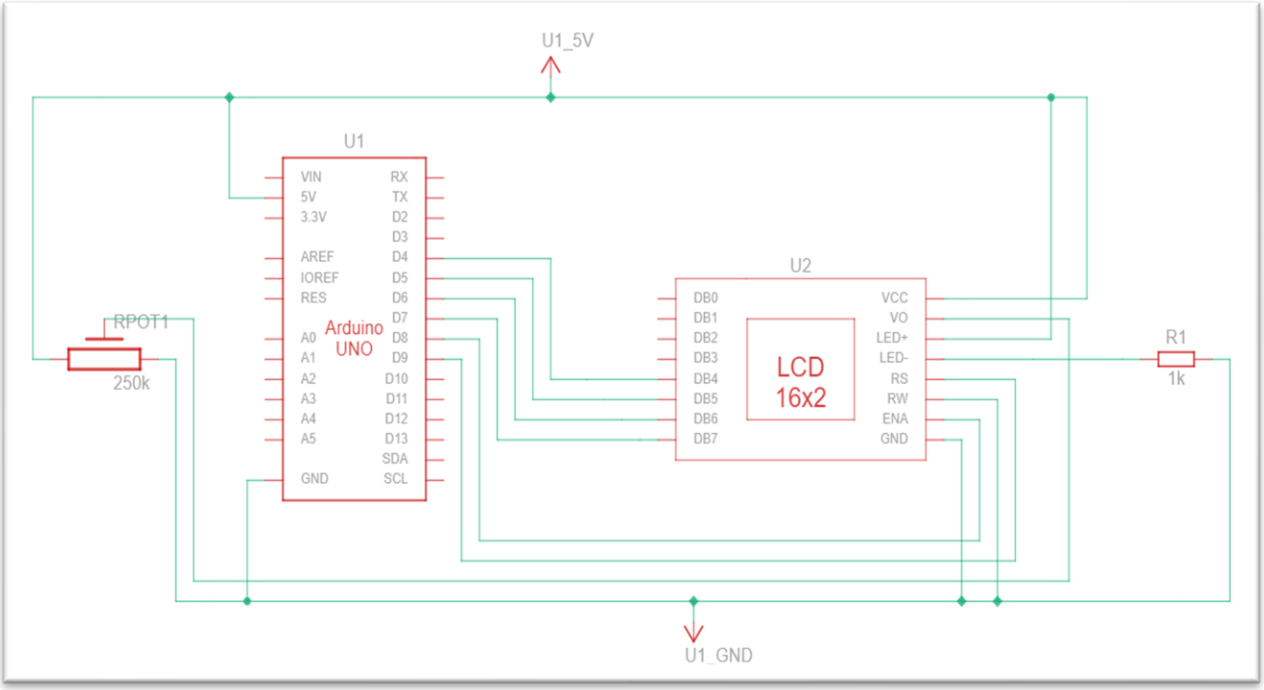

PROGRAM FOR SIMULATION:

Code | Start Simulation | Send To

Text | 1 (Arduino Uno R3)

```
#include <LiquidCrystal.h>


//LiquidCrystal lcd(rs,e,d4,d5,d6,d7);

LiquidCrystal lcd(9,8,4,5,6,7);

void setup()
{
  lcd.begin(16, 2);

  // Display text
  lcd.setCursor(5, 0);   // Column 0, Row 0
  lcd.print("Hello!");

  lcd.setCursor(1, 1);   // Column 0, Row 1
  lcd.print("Arduino + LCD");

}

void loop()
{

}
```

OUTPUT:

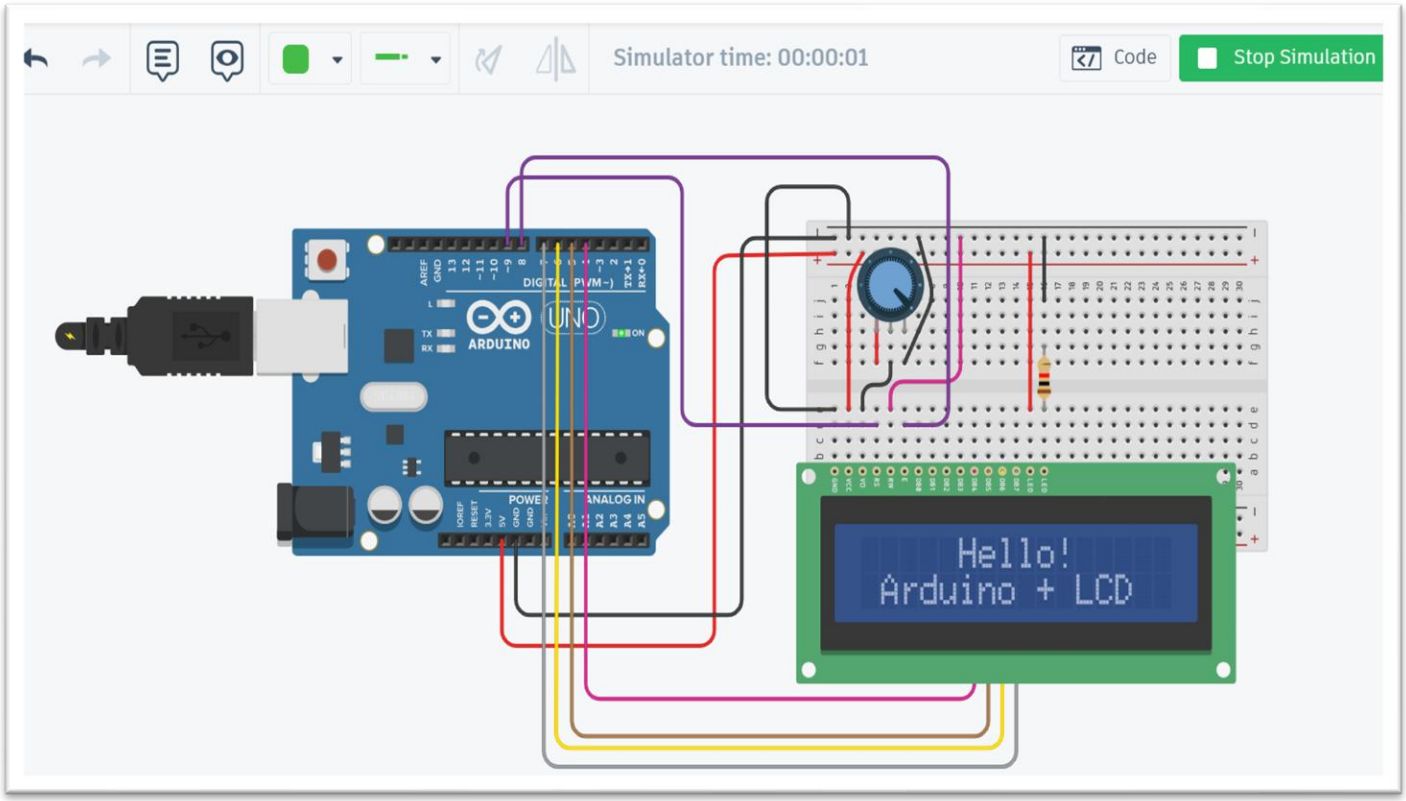

RESULT:

1. The 16×2 LCD was successfully interfaced with the Arduino Uno.
2. The LCD initialized correctly in 4-bit mode using the LiquidCrystal library.
3. The programmed text was displayed properly on the first and second rows of the LCD.
4. Cursor positioning using the lcd.setCursor() function worked as expected.
5. All control and data pin connections functioned correctly without any display errors.
6. The LCD backlight and contrast were adjusted to obtain clear and readable output.
7. The experiment verified correct hardware interfacing and Arduino programming.

LEARNING OUTCOMES:

1. Understood the **working principle of a 16×2 Liquid Crystal Display (LCD)**.
2. Learned how to **interface an LCD with Arduino Uno** using proper hardware connections.
3. Gained knowledge of **LCD control pins and data pins** and their functions.
4. Learned to operate the LCD in **4-bit mode** for efficient pin utilization.
5. Developed skills in using **LiquidCrystal library functions** in Arduino programming.

6. Learned to display text on **specific rows and columns** of the LCD.
7. Improved understanding of **embedded system interfacing concepts**.
8. Gained hands-on experience in **Arduino-based hardware experimentation**.